Tagra | RF 2.4GHz | Battery Powered | LED Wall Plate | 4 Zones | RGB+W | Black (New)

BP4RGBW-B / ITM002615



Datasheet

23-10-2026

Tagra | RF 2.4GHz | Battery Powered | LED Wall Plate | 4 Zones | RGB+W | Black (New)



Control Out	IP Rating	Warranty	Zones
RF 2.4GHz	IP20	5 Years	4 Zones

SKU: BP4RGBW-B
ITM: ITM002615

Key Features:

- **Colour Control Type:** RGBW
- **Control Distance:** 30m
- **Body Colour:** Black
- **Dimensions (W x H x L):** 86 x 10 x 86mm

Mechanical Data			
Body Colour:	Black	**Product Weight:**	10g
Recommended Enclosure Depth:	10mm	**Dimensions (LxWxH):**	86 x 86 x 10mm

Electrical Data	
No. of Batteries:	1

Input Data			
Input Current:	8A	**Input Current Type:**	DC
Input Voltage:	3V		

Control Data			
Battery Type:	CR2032	**Colour Control Type:**	RGBW
Control Distance (barrier-free):	30m	**Control Signal Output:**	RF 2.4GHz

Control Data			
Dimming Range:	0% - 100%	**Max. No. of Receivers:**	30
No. of Scenes:	1	**No. of Zones:**	4

Environmental Data			
Application Environment:	Indoor	**Body Material:**	Glass
Ingress Protection (IP):	IP20	**Mounting Type:**	Surface Mounted
Operating Temperature:	-30°C - 55°C	**Working Humidity:**	-15% - 55%

Protection Data	
Electrical Safety Class:	III

Efficiency Data			
Rated Life:	50000 Hours	**Standby Power Max.:**	0.06W
Standby Power Typ.:	0.03W	**Startup Time:**	2 Secs

Dimension Drawing

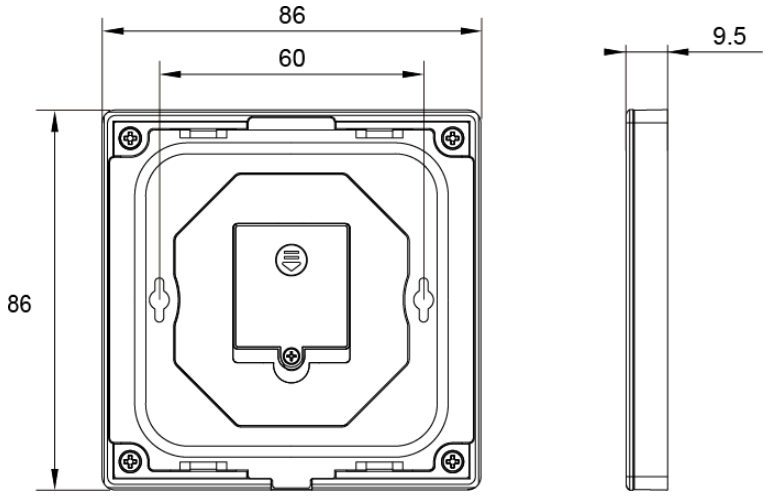

Packaging Data			
Fixings Included:	Yes	**Packaging Height:**	6.5mm
Packaging Length:	100mm	**Packaging Width:**	92mm

Packaging Data

Packaging Weight:	145g

Disclaimer

Tagra Lighting have taken reasonable care to ensure that the information in this datasheet is accurate at time of publication however it should be noted that all specifications are subject to tolerance. Descriptive specifications such as colour are subjective. Tagra Lighting reserve the right to update specifications without notice. The information in the datasheet may only be relied on by customers of Tagra Lighting in accordance with applicable terms and conditions.

Tagra Lighting is a trading name of T.R Ventures Limited, a company incorporated in England with registered number 07757720. Our registered office is Unit 2, Southfield Industrial Estate, Trafford Park, M17 1SJ.

www.tagra-lighting.co.uk

support@tagra-lighting.co.uk